J73 COUPLER & ADAPTER REPAIR KITS

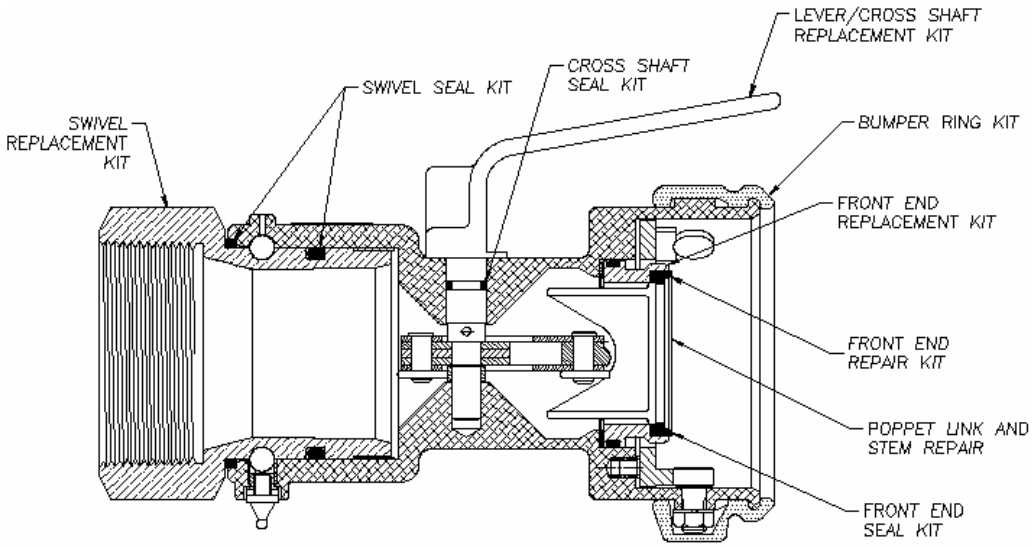

Emco Wheaton has developed a series of REPAIR KITS suitable for the field repair of the J73 Series Couplers & Adapters.
Our previous experience with this type of KIT PROGRAM has proven its value. If a Coupler or an Adapter has a leaky seal or 'O' Ring, or a part worn, the feeling is the installation of a complete REPAIR KIT in that area of concern will give the user far better value for the money, rather than just replacing one or two parts. The installation of the KIT renders a wear zone on the Coupler or Adapter completely rebuilt, and will consequently give longer service life. These KITS are available off the shelf, and come complete with Instruction Sheet and diagram. The part number is prominently displayed for easy stock identification. Below is a summary of the usage and key content of each type of KIT *(All Kits include Silicone Oil, Diagram, and Instruction Sheet):*

Front End (Major) Replacement Kit: For major rebuild of the front end of the coupler. Kit Contains: Nose Piece, Nose Seal, Front End O-ring, Cross Shaft O-ring, roll pins, wave spring, springs, spacer, Interlock Plate, Bayonet Studs (3), Eyelets (3) and nuts (3), Interlock Pin, Retaining ring, and bumper ring.

Front End Seal Kit: For nose seal replacement only. Kit Contains: Nose Seal, Cross Shaft O-ring, Front End O-Ring, Roll Pin, and Aluminium spacer.

Bumper Ring Kit: Contains two (2) Bumper Rings.

Cross Shaft Seal Kit: For replacement of cross shaft seal only. Kit Contains: Cross Shaft O-ring, and Roll Pin.

Lever / Cross Shaft Kit: For replacing the lever and cross-shaft. Kit Contains: Cross Shaft O-Ring, Roll Pin, Aluminum Spacer, and Cross Shaft / Lever Assembly.

Poppet / Link & Stem Replacement Kit: For complete replacement of a damaged Poppet / Link & Stem Assembly. Kit Contains: Poppet / Link & Stem Assembly (complete), Roll Pin, and Cross-Shaft O-Ring.

Swivel Seal Kit: For repair of the straight or 90° swivel. Kit Contains: Ball bearings (6), Bearing Strip, Felt Wiper, Lube Fitting, Quad Ring Seal, Ball Retainer, and Seal Disc (BSP/ISO only).

Swivel Replacement Kit: For replacement of the straight or 90° swivel. Kit Contains: Ball bearings (27), Swivel Body, Bearing Strip, Felt Wiper, Lube Fitting, Quad Ring Seal, Ball Retainer, and Seal Disc (BSP/ISO only)

COUPLERS

To determine the correct repair kit for your coupler, find the part number of the coupler in the list at the left-hand side. Then follow the line to determine the kit number. For example, the cross shaft seal kit for J73C-ABN2-A is 800453.

COUPLER PART #	Front End Replace-ment Kit	Front End Repair Kit	Front End Seal Kit	Cross Shaft Seal Kit	Lever / Cross Shaft Replace-ment Kit	Poppet / Link & Stem Repair Kit	Swivel Replace-ment Kit	Swivel Seal Kit	Bumper Ring Kit
COUPLERS WITH STRAIGHT SWIVEL									
J73C-ABB1-A	800447	800476	800450	800453	800470	800471	800461	800458	800474
J73C-ABI1-B									
J73C-ABN1-A							800464	800467	
J73C-ABN1-A003									
J73C-ABN1-B									
J73C-ABN1-B003									
J73C-AVB1-A	800448	800477	800451	800454	800456	800472	800462	800459	
J73C-AVI1-B									
J73C-AVN1-A							800465	800468	
J73C-AVN1-A003									
J73C-AVN1-B									
J73C-AVN1-B003									
COUPLERS WITH 90º ELBOW SWIVEL									
J73C-ABN2-A	800447	800476	800450	800453	800470	800471	800479	800467	800474
J73C-ABN2-B									
J73C-ABI2-B								800458	
J73C-AVN2-A	800448	800477	800451	800454	800456	800472	800480	800468	
J73C-AVN2-B									
J73C-AVI2-B								800459	

ADAPTERS

Listed below are the repair kits that are now available for Adapters.

ADAPTER PART #	Kit #
J73A-ABN0-A	800339
J73A-ABT0-A	
J73A-AVN0-A	800340
J73A-AVN0-A003	
J73A-AVT0-A	
J73A-BBN0-A	800336
J73A-BBN0-A003	
J73A-BBT0-A	
J73A-BEN0-A003	800337
J73A-BVN0-A	800335
J73A-BVN0-A003	
J73A-BVT0-A	

Each of the above kits includes the following items: Front End and Back End Retaining Screws, Poppet and Screw O-Rings, Sealing Washer, Spring, Flat Washer.

ADAPTER PART #	Kit #
J73A-ABN0-B	800647
J73A-BBN0-B	
J73A-BBN0-B003	
J73A-ABI0-B	800650
J73A-BBI0-B	
J73A-AVN0-B	800648
J73A-AVN0-B003	
J73A-BVN0-B	
J73A-BVN0-B003	
J73A-AVI0-B	800651
J73A-BVI0-B	

Each of the above kits includes the following items: O-Ring, Spring, Retaining Ring, Sealing Disc (ISO 228 Inlet Kits only).

ADAPTER PART #	Kit #
All J1302 w/ VITON seals	493374
All J1302 w/ BUNA seals	493373

Each of the above kits includes the following items: Retaining Screw, Screw O-Ring, Seal Ring, Spring.

Revised June 2009